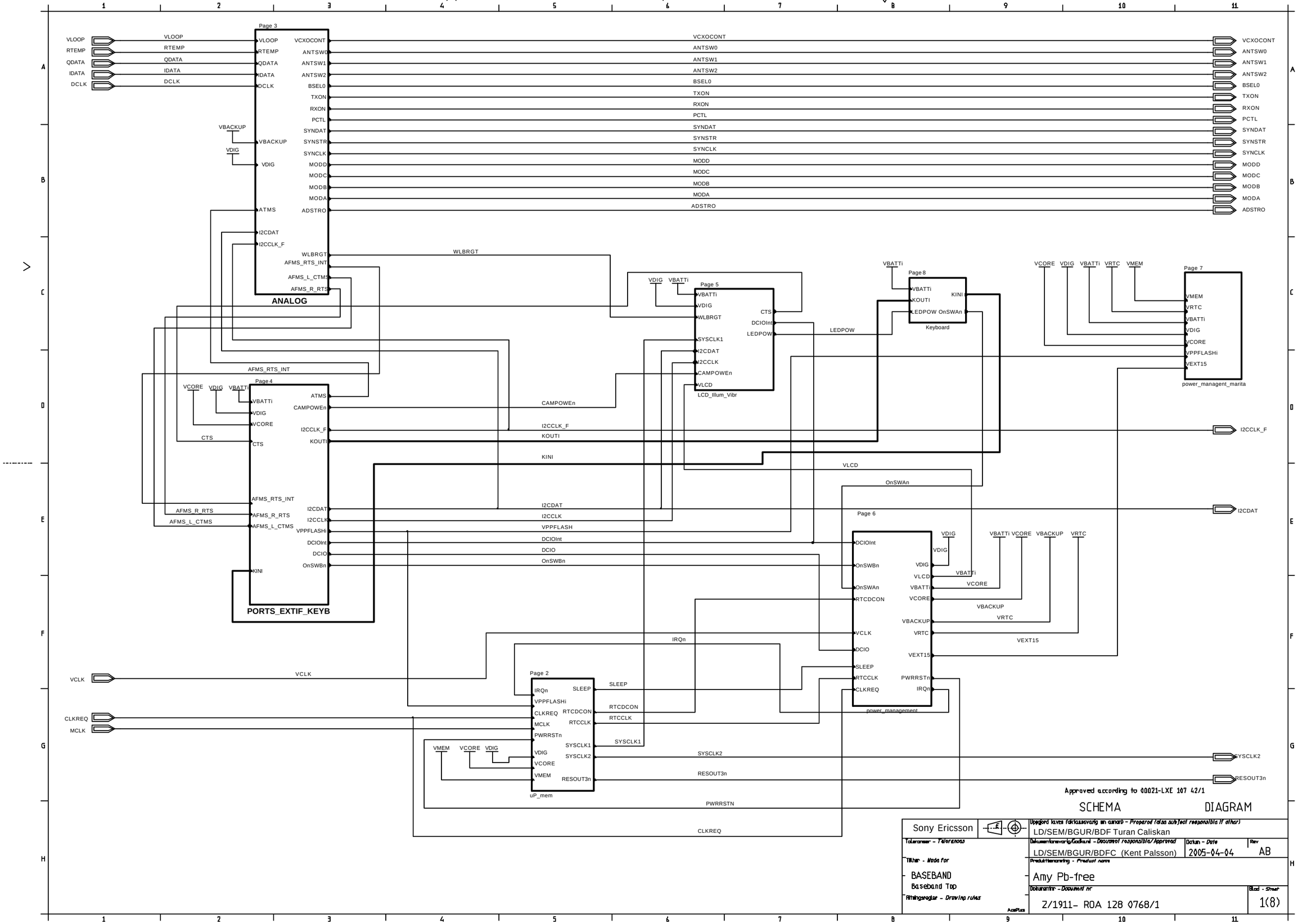

PDF processed with CutePDF evaluation edition www.CutePDF.com

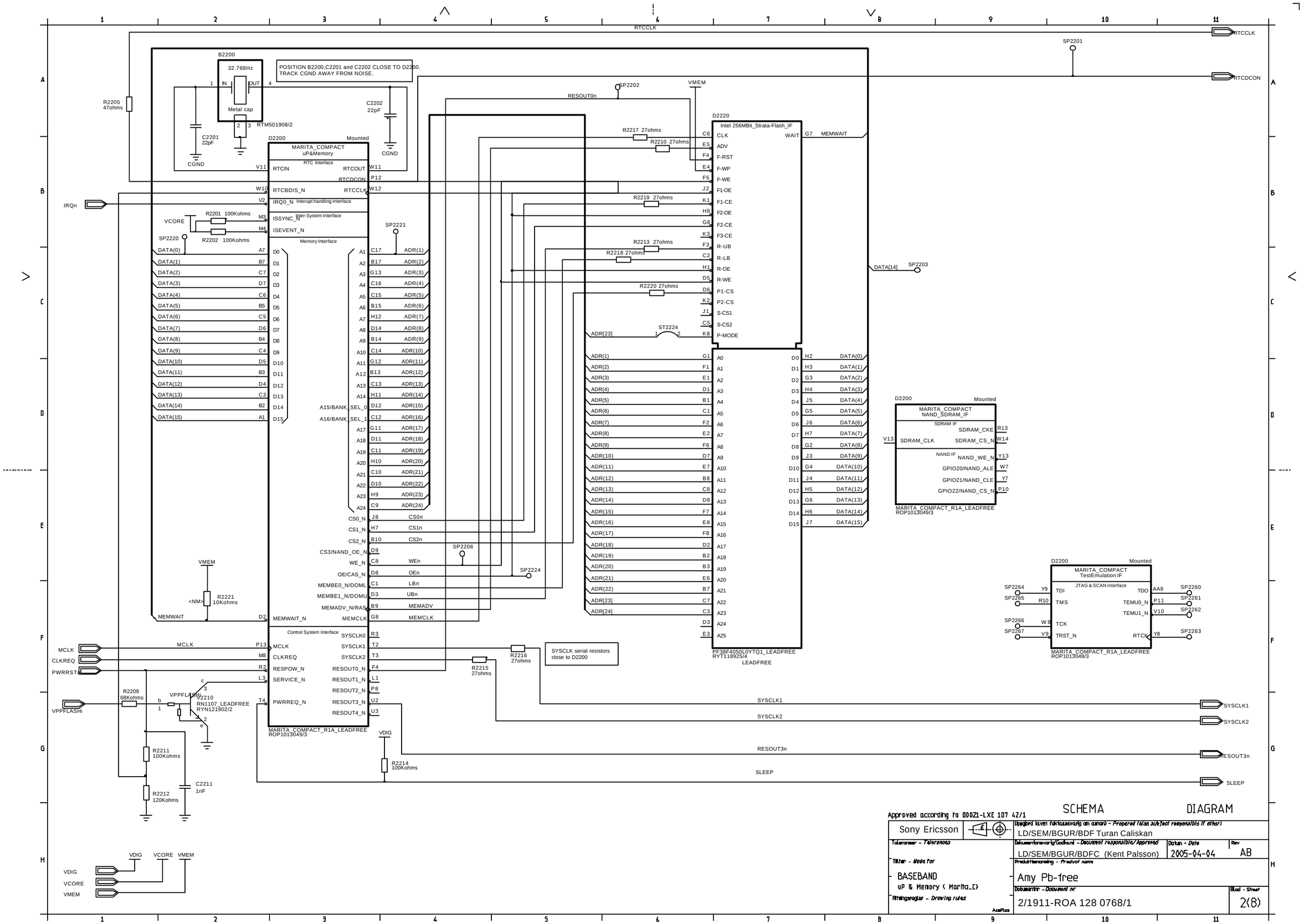

LZF 930 102/F R8

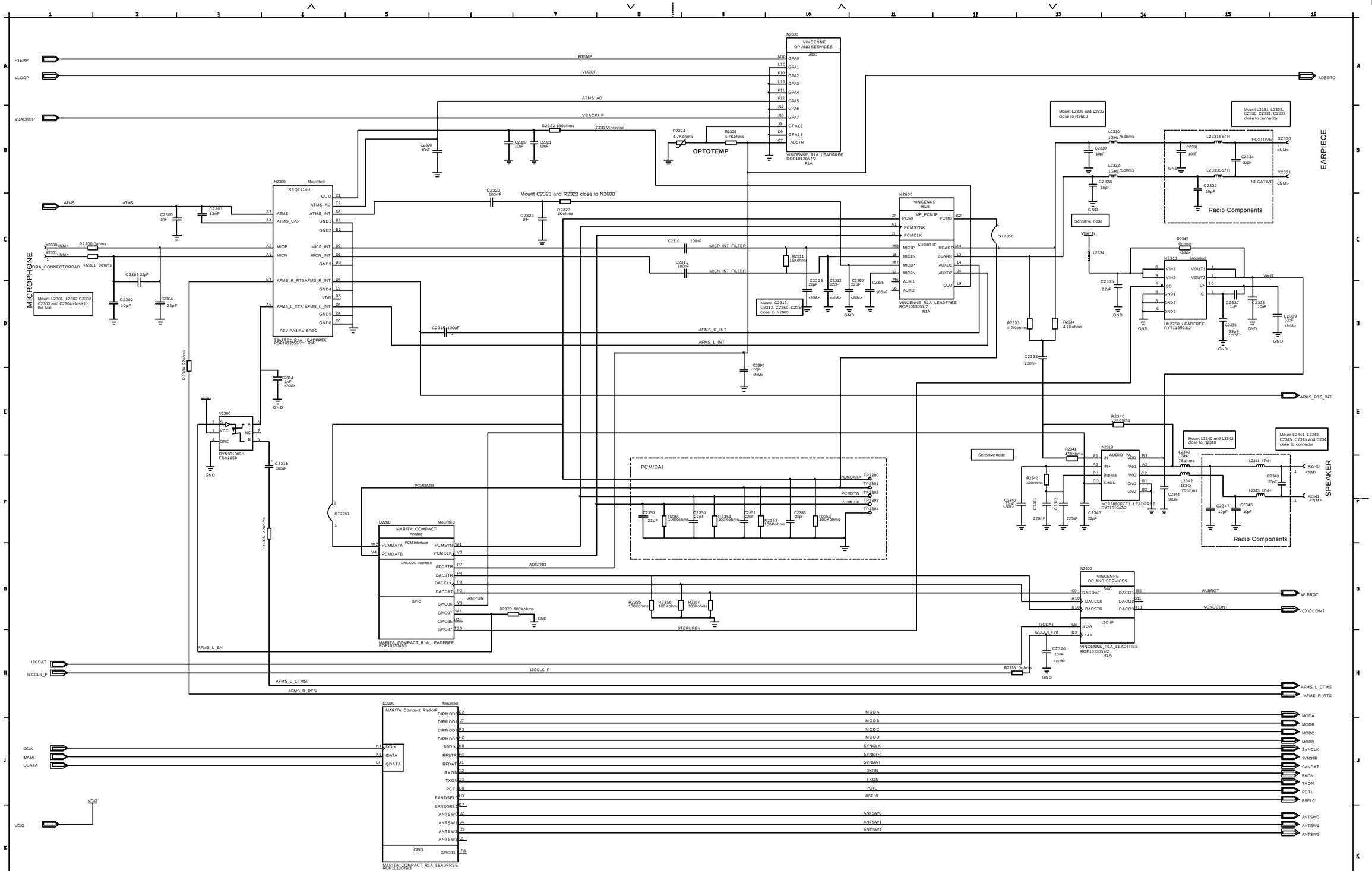

Approved according to 08E21-LXE 307 42/1

KRETSSCHEMA CIRCUIT DIAGRAM

Sony Ericsson

LD/SEM/BGUR/BDF Turan Caliskan

LD/SEM/BGUR/BDFC (Kent Palsson)

2005-04-04

AB

BASEBAND Analog

Amy Pb-free

2/1911- ROA 128 0768/1

3(8)

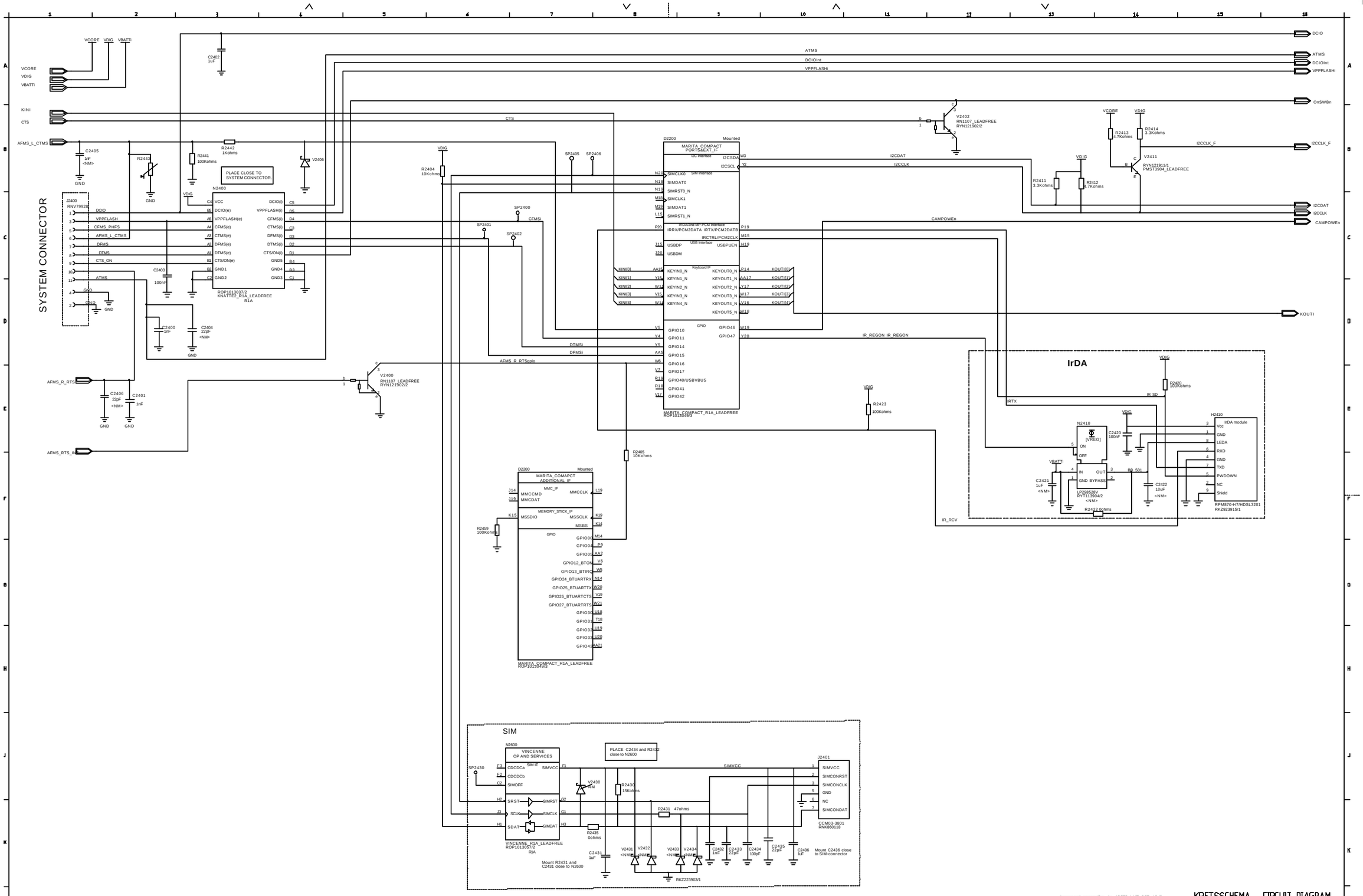

Approved according to 08821-LXE 307 42/1

KRETSSCHEMA CIRCUIT DIAGRAM

Sony Ericsson	LD/SEM/BGUR/BDF Turan Caliskan
BASEBAND	LD/SEM/BGUR/BDFC (Kent Palsson) — 2005-04-04 — AB
Ports, External Interfaces, Keyboard	Amy Pb-free
	2/1911- ROA 128 0768/1 — 4(8)

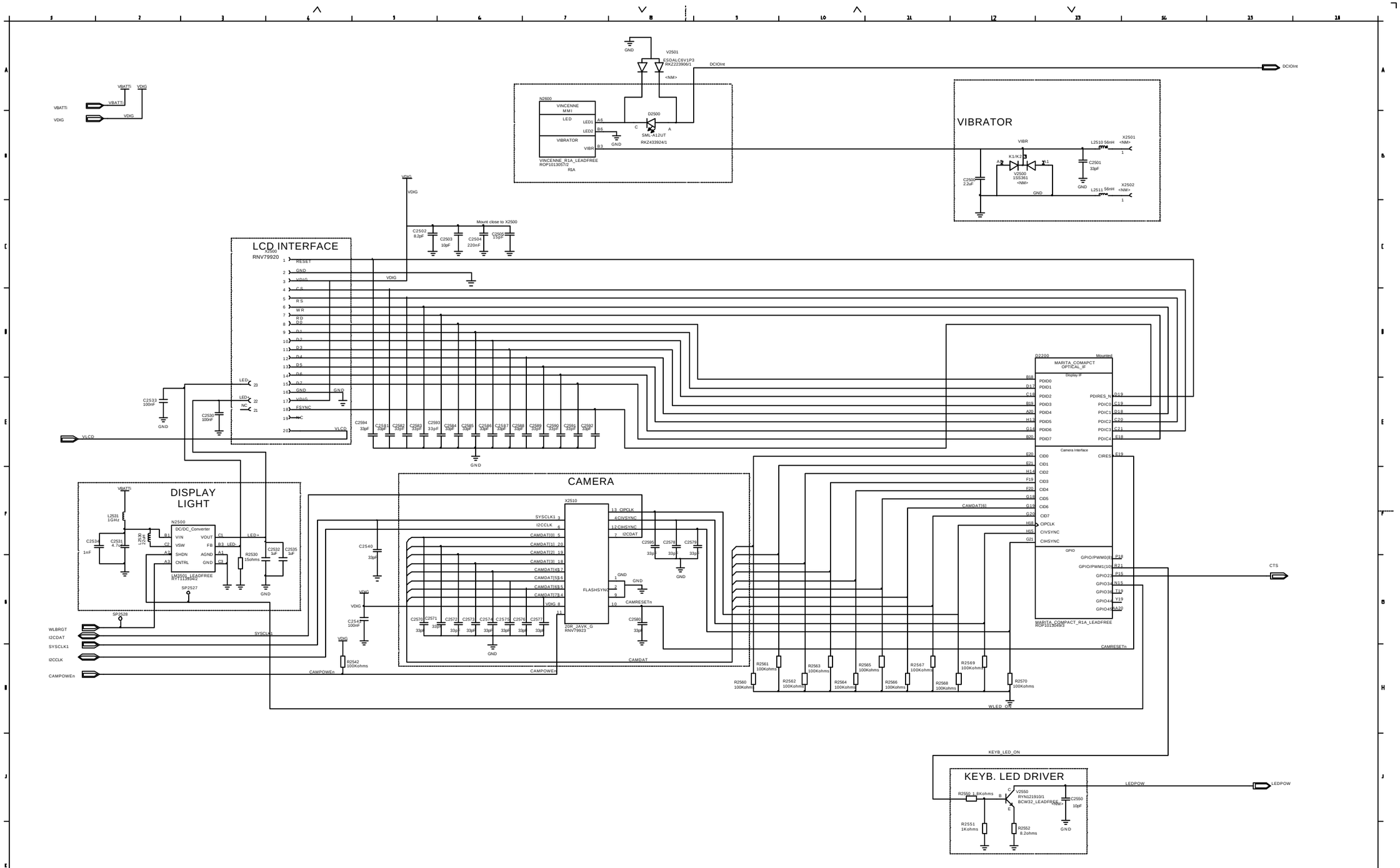

Approved according to 00021-LXE107 42/1

KRETSSCHEMA CIRCUIT DIAGRAM

Sony Ericsson	LD/SEM/BGUR/BDF Turan Caliskan
	LD/SEM/BGUR/BDFC (Kent Palsson) 2005-04-04 REV AB
BASEBAND	Amy Pb-free
LCD,Illumination, Vibrator	2/1911-ROA 128 0768/1 Sheet 5(8)

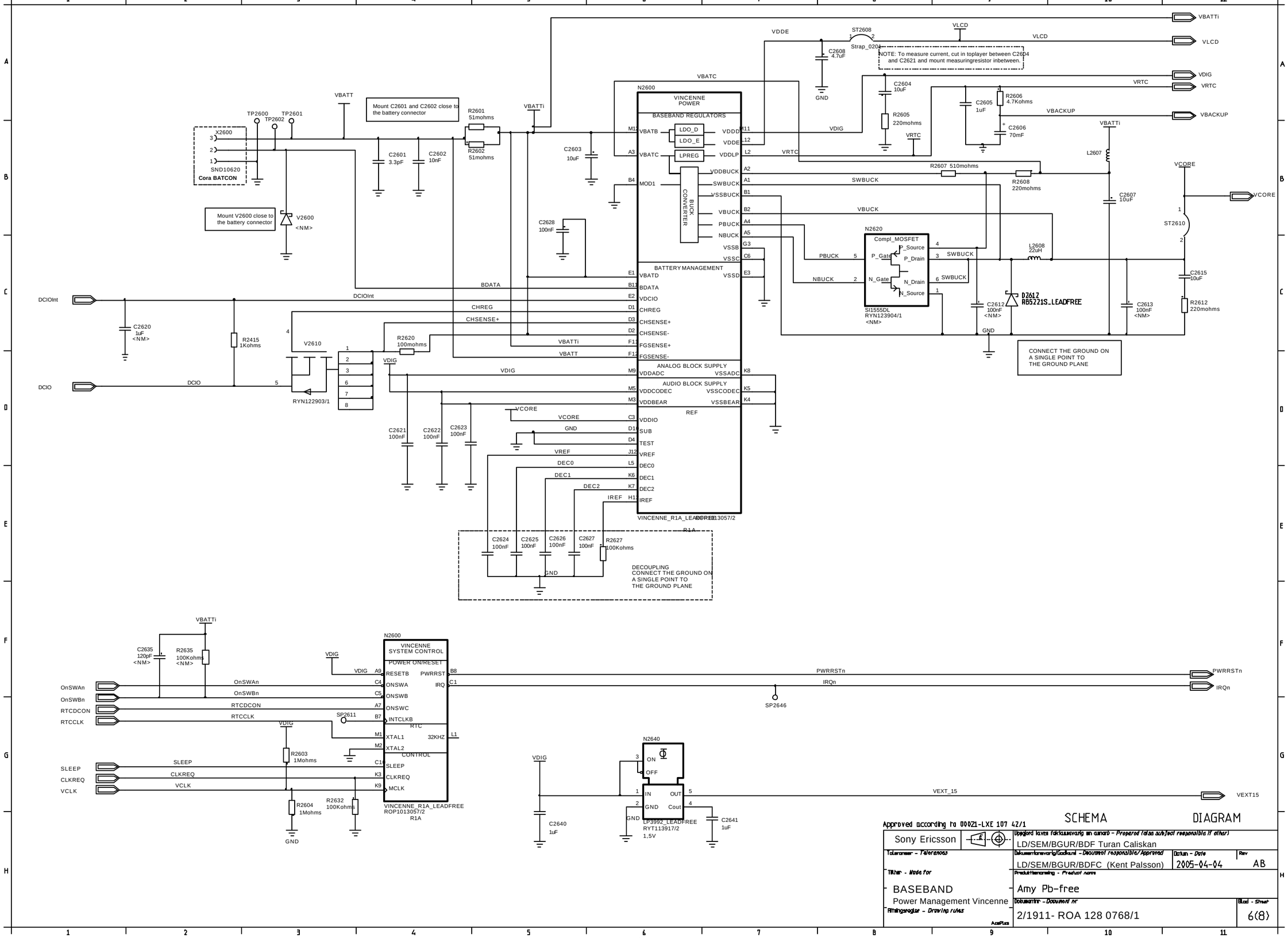

Approved according to 00021-LXE 107 42/1

SCHEMA DIAGRAM

Sony Ericsson

Upprätt av/Prepared (also subject responsible if other): LD/SEM/BGUR/BDF Turan Caliskan

Dokumentansvarig/Document responsible/Approved: LD/SEM/BGUR/BDFC (Kent Palsson)

Datum - Date: 2005-04-04

Rev: AB

Tillhör - Made for: BASEBAND Power Management Vincenne

Produktkoncept - Product name: Amy Pb-free

Dokumentnr - Document nr: 2/1911- ROA 128 0768/1

Blad - Sheet: 6(8)

Ritningsregler - Drawing rules: AutoPlus

LZF 030 102/F R8

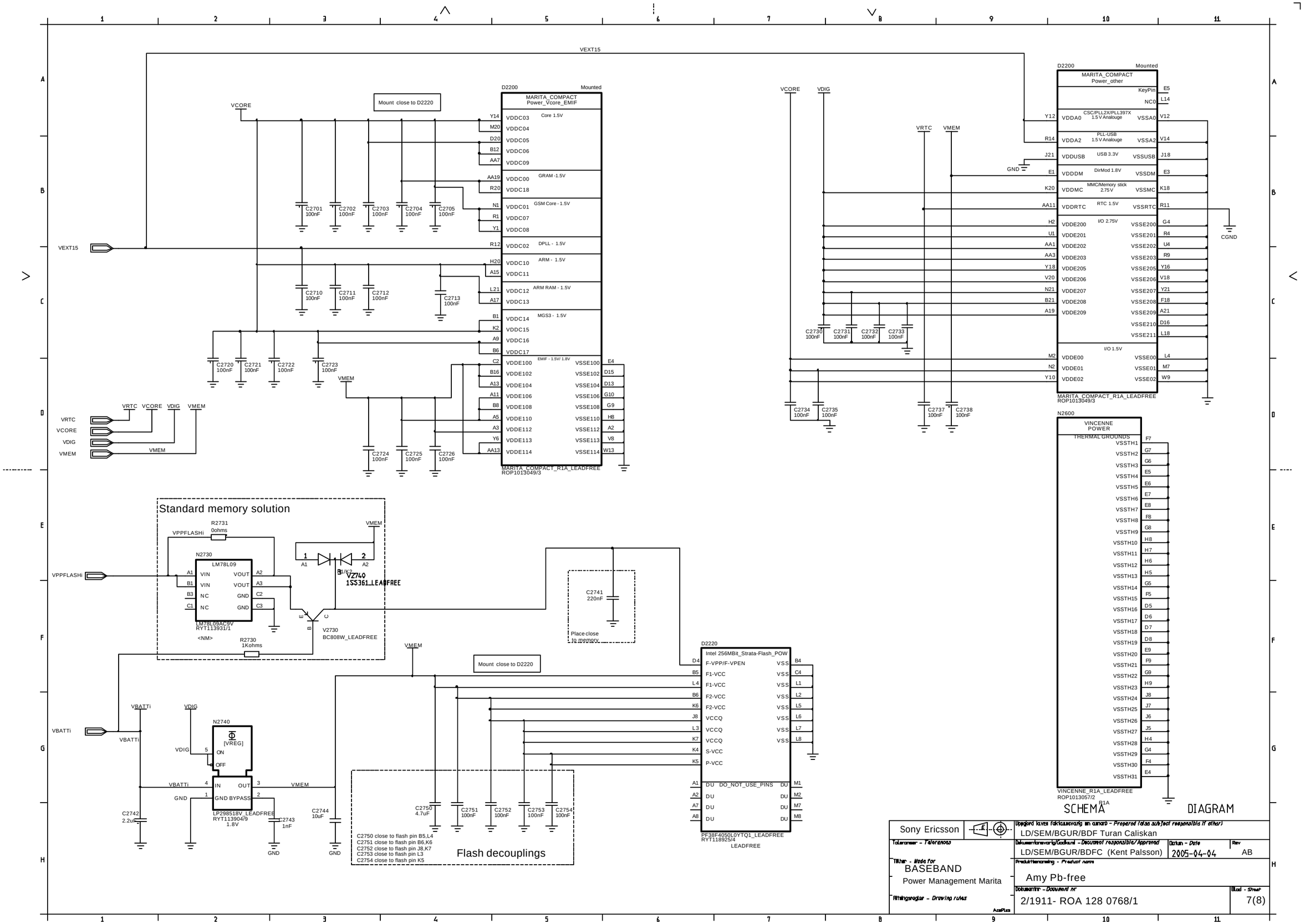
VEXT15
D2200 Mounted
MARITA_COMPACT
Power_Vcore_EMIF
Mount close to D2220
VCORE
Core 1.5V
GRAM -1.5V
GSM Core - 1.5V
DPLL - 1.5V
ARM - 1.5V
ARM RAM - 1.5V
MGS3 - 1.5V
EMIF - 1.5V/ 1.8V
VDDC03 VDDC04 VDDC05 VDDC06 VDDC09 VDDC00 VDDC18 VDDC01 VDDC07 VDDC08 VDDC02 VDDC10 VDDC11 VDDC12 VDDC13 VDDC14 VDDC15 VDDC16 VDDC17
VDDE100 VDDE102 VDDE104 VDDE106 VDDE108 VDDE110 VDDE112 VDDE113 VDDE114
VSSE100 VSSE102 VSSE104 VSSE106 VSSE108 VSSE110 VSSE112 VSSE113 VSSE114
MARITA_COMPACT_R1A_LEADFREE
ROP1013049/3
C2701 100nF C2702 100nF C2703 100nF C2704 100nF C2705 100nF
C2710 100nF C2711 100nF C2712 100nF C2713 100nF
C2720 100nF C2721 100nF C2722 100nF C2723 100nF
C2724 100nF C2725 100nF C2726 100nF
VMEM
VRTC VCORE VDIG VMEM
Standard memory solution
R2731 0ohms
VPPFLASHi
N2730
LM78L09
VIN VIN NC NC VOUT VOUT GND GND
LM78L09ACSV
RYT113931/1
<NM>
R2730 1Kohms
V2740
1SS361_LEADFREE
V2730
BC808W_LEADFREE
C2741 220nF
Place close to memory
VBATTi
N2740
[VREG]
ON OFF
IN OUT GND BYPASS
LP298518V_LEADFREE
RYT113904/9
1.8V
C2742 2.2uF
C2743 1nF
C2744 10uF
GND
Mount close to D2220
D2220
Intel 256MBit_Strata-Flash_POW
F-VPP/F-VPEN
F1-VCC F1-VCC F2-VCC F2-VCC VCCQ VCCQ VCCQ S-VCC P-VCC
DU DO_NOT_USE_PINS DU DU DU
VSS
PF38F4050L0YTQ1_LEADFREE
RYT118925/4
LEADFREE
C2750 4.7uF C2751 100nF C2752 100nF C2753 100nF C2754 100nF
C2750 close to flash pin B5,L4
C2751 close to flash pin B6,K6
C2752 close to flash pin J8,K7
C2753 close to flash pin L3
C2754 close to flash pin K5
Flash decouplings
D2200 Mounted
MARITA_COMPACT
Power_other
KeyPin NC0
CSC/PLL2X/PLL397X 1.5 V Analouge VDDA0 VSSA0
PLL-USB 1.5 V Analouge VDDA2 VSSA2
USB 3.3V VDDUSB VSSUSB
DirMod 1.8V VDDDM VSSDM
MMC/Memory stick 2.75V VDDMC VSSMC
RTC 1.5V VDDRTC VSSRTC
I/O 2.75V
VDDE200 VDDE201 VDDE202 VDDE203 VDDE205 VDDE206 VDDE207 VDDE208 VDDE209
VSSE200 VSSE201 VSSE202 VSSE203 VSSE205 VSSE206 VSSE207 VSSE208 VSSE209 VSSE210 VSSE211
I/O 1.5V
VDDE00 VDDE01 VDDE02
VSSE00 VSSE01 VSSE02
MARITA_COMPACT_R1A_LEADFREE
ROP1013049/3
C2730 100nF C2731 100nF C2732 100nF C2733 100nF
C2734 100nF C2735 100nF C2737 100nF C2738 100nF
GND CGND
N2600
VINCENNE
POWER
THERMAL GROUNDS
VSSTH1 VSSTH2 VSSTH3 VSSTH4 VSSTH5 VSSTH6 VSSTH7 VSSTH8 VSSTH9 VSSTH10 VSSTH11 VSSTH12 VSSTH13 VSSTH14 VSSTH15 VSSTH16 VSSTH17 VSSTH18 VSSTH19 VSSTH20 VSSTH21 VSSTH22 VSSTH23 VSSTH24 VSSTH25 VSSTH26 VSSTH27 VSSTH28 VSSTH29 VSSTH30 VSSTH31
VINCENNE_R1A_LEADFREE
ROP1013057/2
R1A
SCHEMA DIAGRAM
Sony Ericsson
Upprätt av/av (ansvarig för innehållet) - Prepared (also subject responsible if other)
LD/SEM/BGUR/BDF Turan Caliskan
Tolerances - Tolerances
Dokumentansvarig/Godkänd - Document responsible/Approved
LD/SEM/BGUR/BDFC (Kent Palsson)
Datum - Date
2005-04-04
Rev
AB
Titel - Title for
BASEBAND
Power Management Marita
Produktbeteckning - Product name
Amy Pb-free
Ritningsregler - Drawing rules
Dokumentnr - Document nr
2/1911- ROA 128 0768/1
Blad - Sheet
7(8)
LZF 030 107/F R8

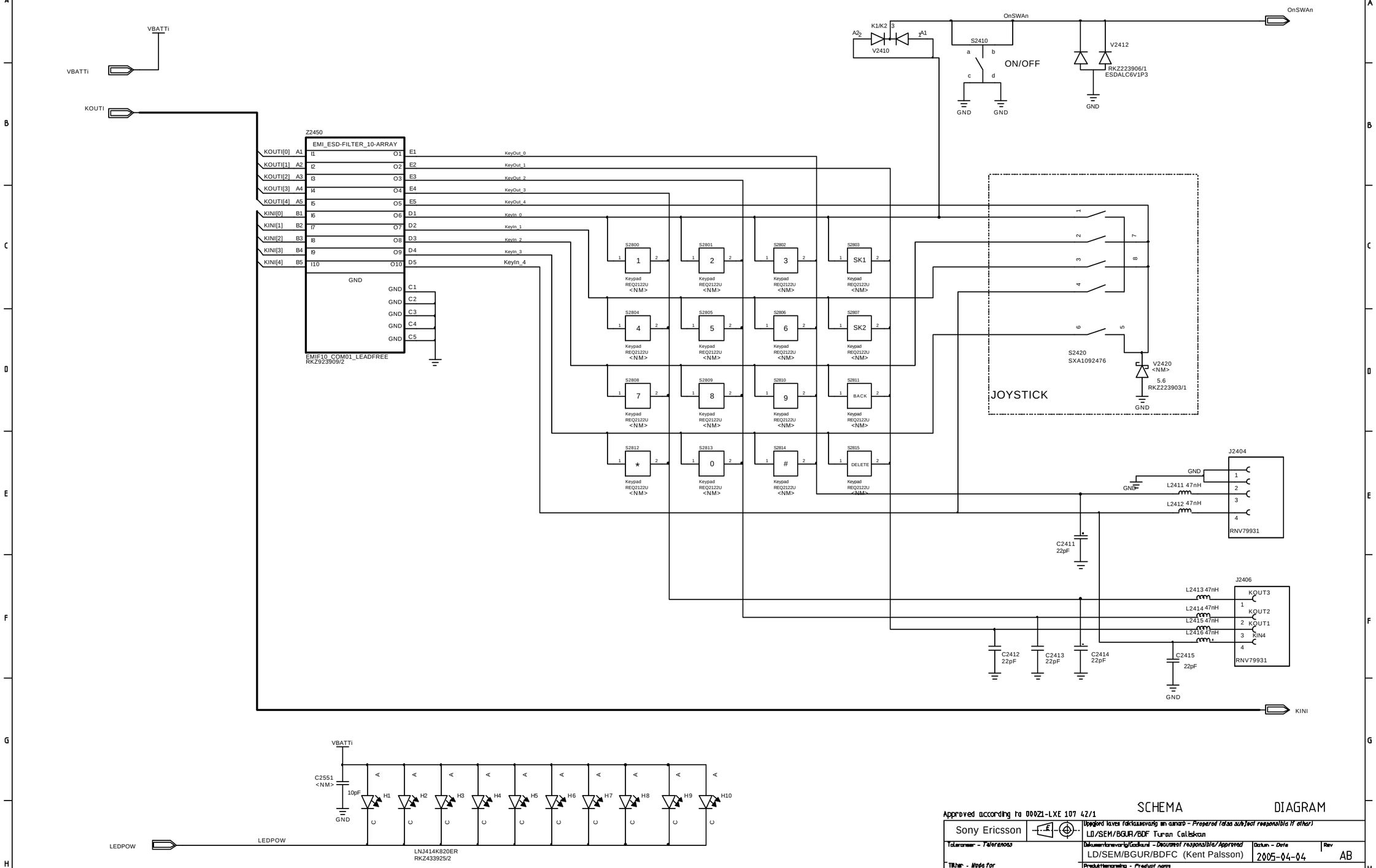

Approved according to 00021-LXE 107 42/1

SCHEMA DIAGRAM

Sony Ericsson

Uppgjord av/Prepared (also subject responsible if other)
LD/SEM/BGUR/BDF Turan Caliskan

Tolerances - Tolerances

Dokumentansvarig/Approved
LD/SEM/BGUR/BDFC (Kent Palsson)

Datum - Date
2005-04-04

Rev
AB

Tillhör - Made for
BASEBAND
Keyboard

Produktbenämning - Product name
Amy Pb-free

Ritningsregler - Drawing rules

Dokumentnr - Document nr
2/1911-ROA128 0768/1

Blad - Sheet
8(8)

LZF 030 102/F R8