TVK: Layer information
Layer 1: Component top, signal
Layer 2: Mixed signal
Layer 3: GND main
Layer 4: Power, RF Striplines, Audio to/from amplifier, mixed signal
Layer 5: Power, mixed signal
Layer 6: GND local, mixed signal
Layer 7: RFinterrface, mixed signal
Layer 8: Component bottom, signal

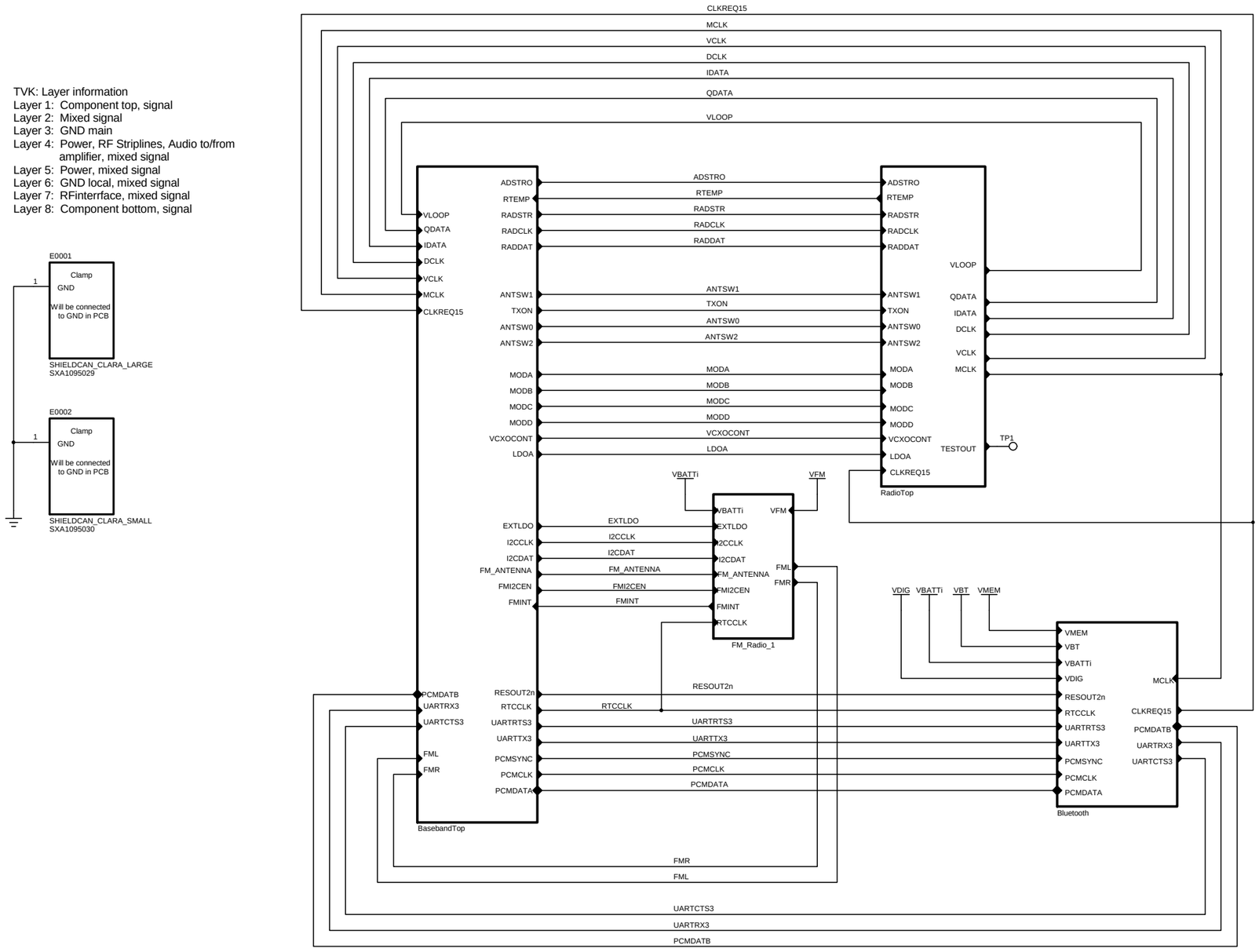

Approved according to 00021-LXE 107 42/1

SCHEMA DIAGRAM

Sony Ericsson	Uppgjord (även faktaansvarig om annan) - *Prepared (also subject responsible if other)* LD/SEM/BGUR/BDG Bengt Hedbjork	
Toleranser - *Tolerances* Clara Top	Dokumentansvarig/Godkänd - *Document responsible/Approved* LD/SEM/BGUR/BDGC (Johan Mercke)	Datum - *Date* 2005-03-31 / Rev F
Tillhör - *Made for* RADIO-BASEBAND-BLUETOOTH- FM-RADIO	Produktbenämning - *Product name* CLARA R4 - TP5	
Ritningsregler - *Drawing rules* AcePlus	Dokumentnr - *Document nr* 1911-ROA 128 1153	Blad - Sheet 1(1)

LZF 030 102/F RB